PDI 95
PID Controller

CARLO GAVAZZI


PDI 95

- 48x96 mm case, for flush-in panel mounting
- °C/°F/Reamur unit selectable for temperature probe
- 5 outputs status LEDs
- Automatic Control, Bumpless Manual Control or Control OFF mode
- FAST or OSCILLATORY AUTOTUNING, SELFTUNING
- Loop-Break Alarm function enable
- Reaching of the set point at controlled speed, rump and dwell function
- Motorized actuators control
- 2 Programmable Digital Inputs
- Input for CT transformers working as HB alarm function
- RS485 serial communication with MODBUS-RTU protocol and transmission up to 9600 Band

Product Description

Digital microprocessor based controller with dual display, 4 red + 4 green digits and 3 operation bottons, designed for different application such as Plastics Industries, Thermal Equipment, Packaging Machinery, Textile/die processing machinery, generic cooling/heating process, water chillers, eat recovery system, Chemical, etc. Up to 4 configurable set points. A configurable multi input for probes, a current transformer Input for HB function, up to 2 auxiliary digital input for active set point and controller status commutation. Up to 5 configurable outputs for relay or solid state relay (SSR) driving or analogue current outputs. Different alarm output configuration available. The device incorporates different control modes: ON/OFF, single or double (direct and reverse) action PID or motorized actuators PID control with time positioning control.
Multi-level parameters programming protected by password. RS485 serial communication for remote control.

Ordering Key

PDI95 T C X R X X X X H

- **Model**
- **Input Signal**
- **Output A (C1)**
- **Output B (C2 or AI4)**
- **Output C (AI1)**
- **Output D (AI2)**
- **Output E (AI3 or HB)**
- **Output F (C1+C2)**
- **Serial Com./Aux. In**
- **Power Supply**

Approvals

CE c UL us

Type Selection

Input Signal

T: TC (B, E, J, K, L, N, R, S, T, U)
RTD (Pt100 IEC, PT100 JIS)
0-50mV
I: 0/4-20mA
V: 0/1-5V
W: 0/2-10V

OUTPUT A (C1)
Main output or for Motorized Actuators

R: Relay or 24VDC for SSR
C: 0/4-20mA
V: 0/2-10V

OUTPUT B (C2/AI4)
Cooling Output or for Motorized Actuators

X: No
R: Relay
O: 24VDC for SSR
C: 0/4-20mA
V: 0/2-10V

OUTPUT C (AI1)
Alarm Output AI1

X: No
R: Relay
O: 24VDC for SSR

OUTPUT D (AI2)
Alarm Output AI2

X: No
R: Relay
O: 24VDC for SSR

OUTPUT E (AI3/HB)
Alarm Output AI3 or HB

X: No
R: Relay
O: 24VDC for SSR

OUTPUT F (C1+C2)
Motorized Actuators Control set

X: No
M: Yes

Serial Communication / Auxiliary Input

X: No
S: RS485
I: Auxiliary Input

Power Supply

L: 24VAC/DC
H: 90-240VAC

Input Data

One multi-configurable Input	
Thermocouples	TC B, E, J, K, L, N, R, S, T, U - According to IEC 584-2, accuracy class 1 or 2
Thermoresistance	RTD Pt100 - According to IEC 751, accuracy class A or B or Pt100 JIS
Normalized analogue signals	0-50 mV 0/4-20 mA 0/1-5 V, 0/2-10 V
One Current Transformer Input	CT Input fo HB alarm with K=1/0.002 (max 200mA)
Two Auxiliary Signal Inputs	2 Optoinsulated digital Inputs for free voltage contacts or open collectors

CARLO GAVAZZI

Output Data

Up to five Outputs	
Relay	(5A-AC1, 2A-AC3 / 250VAC) (10A max. per common)
Relay electric life	100000 operations
Voltage SSR driving	Voltage for SSR (24Vdc/0mA, 14Vdc/20mA)
Auxiliary power supply Output	18VDC / 25mA max. Only for norm. signal
Up to two Outputs	
Normalized Signal Analogue Outputs	0/4-20mA (R load < 600Ω) 0/2-10V (R load > 100kΩ) (only for C1 or C2)

Note 1:	When motorized actuator control is selected: both output C1+C2 have to be present as relay type.
Note 2:	If HB function is selected C1 output cannot be analogue type.
Note 3:	If C2 Cooling output is analogue type also C1 output must be the same. Instead if C1 output is analogue, C2 output can be different.
Note 4:	Al1, Al2, HB alarm outputs have to be the same type. Al4 alarm output can be different from the others.

Functional Data

Control	ON/OFF, PID single and double action programmable
Multi-Set Points	Up to 4 programmable Set Points
Overall accuracy	±0.15% full scale (for Input T) ±0.05% full scale (for Input I, V, W)
Display resolution	According to the used probe 1/0,1/0,01/0,001
Input measurement range	According to the used probe and to the measurement unit
Sampling rate	5 samples per second
Display	4 red + 4 green digits h=7 mm
Parameter access	Protected by password
Operating temperature	0-50 °C
Operating humidity	30-95 RH% without condensation
Serial Communication	RS485 with MODBUS RTU (JBUS) protocol
Communication Rate	300..9600 Baud, selectable

General Data

Mechanical Charactistics	
Housing	Self-extinguishing plastic, UL94 V0
Connections	6.3mm faston terminal block
Mounting	Flush in panel cut out 45x92mm
Front panel protection	IP54 mounted in panel with gasket
Dimensions	W 48 x H 96 x D 100mm
Weight	290g
Storage temperature	-10°C to +60°C
Electrical Data	
Power Supply	24VAC/VDC, 90-240VAC +/-10%
AC Frequency	50 / 60Hz
Power consumption	10VA approx.
Electric shock protection class	Class II for Front panel
Insulation	Reinforced insulation between the low voltage section (power supply and relay outputs) and the front panel or between the low voltage section (power supply and relay outputs) and the extra low voltage section (inputs, SSR, outputs and analogue output); no insulation between and inputs or SSR outputs and analogue output. RS485 optoinsulated.

CARLO GAVAZZI

Dimensions (mm)

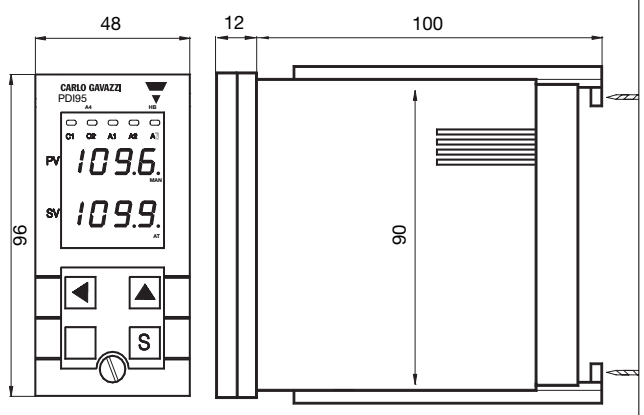

Front Panel Description

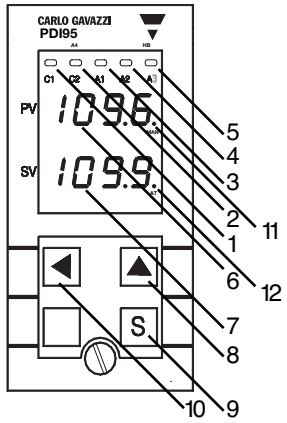

1. **LED C1** main C1 out status
2. **LED C2/AI4** C2 or AI4 out status
3. **LED AI1** AI1 alarm out status
4. **LED AI2** AI2 alarm out status
5. **LED AI3/HB** AI3 or HB status
6. **Process Value**
7. **Set Value**
8. **Key Up** function
9. **Key P** program function
10. **Key Left** Shift cursor function
11. **LED MAN** manual control
12. **LED AT** mode

Connections

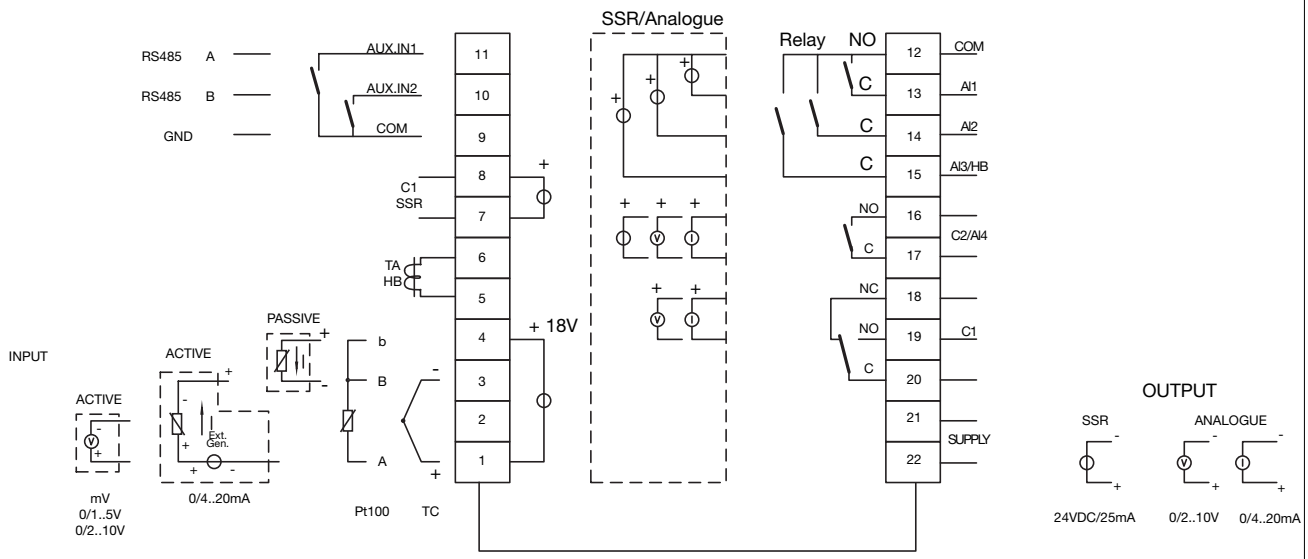

Panel Cut Out (mm)